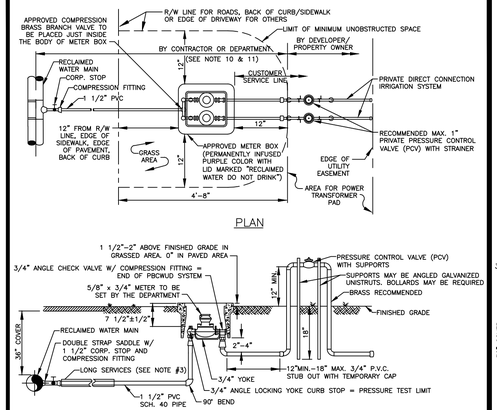

NOTES:

1. PIPING, VALVES & BOX LID TO BE PERMANENTLY IDENTIFIED AS "RECLAIMED WATER SYSTEM" COMPONENTS. PVC FITTINGS SHALL BE SCHEDULE 80.
2. 12" MINIMUM CLEARANCE TO BE MAINTAINED BETWEEN METER BOX AND ANY OBSTRUCTION.
3. FOR INSTALLATION OF SERVICES UNDER DRIVEWAYS AND ROADWAYS USE MIN. 3" DIAMETER PVC SCH 40 OR HDPE SDR 9 PURPLE CASING. CASING TO EXTEND MIN. 24" BEYOND EDGE OF PAVEMENT. END OF CASING TO BE SEALED WITH CEMENT.
4. SUCCESSIVE TAPS INTO THE WATER MAIN SHALL BE SPACED A MINIMUM OF 18" APART AND SHALL NOT BE ON A COMMON LINE PARALLEL TO THE LONGITUDINAL AXIS OF THE PIPE. TAPS ON THE SAME SIDE OF A P.V.C. PIPE SECTION SHALL BE MIN. 10' APART.
5. METER SHALL NOT BE PLACED IN SIDEWALK OR DRIVEWAY AREAS. SERVICE LINES AND TAPS SHALL NOT BE PLACED UNDER DRIVEWAYS WHENEVER POSSIBLE.
6. CHECK VALVE IS REQUIRED FOR EVERY RECLAIMED WATER SERVICE.
7. MAXIMUM SERVICE LENGTH IS 100' TO METER.
8. BEDDING (MIN. 4") AND COVER (MIN. 4") OVER SERVICE LINE OR CASING SHALL CONSIST OF FINE GRANULAR MATERIAL. UNSUITABLE IN-SITU MATERIALS SUCH AS MUCK, DEBRIS AND LARGER ROCKS SHALL BE REMOVED WITH 2" MAXIMUM SIZE.
9. METER SERVICE WILL NOT BE INSTALLED UNTIL:
   A. FORM BOARDS FOR DRIVEWAY AND/OR SIDEWALK ARE IN PLACE OR DRIVEWAY OR SIDEWALK IS IN PLACE
   B. "MINIMUM UNOBSTRUCTED SPACE" (AS SHOWN) IS PROVIDED. MINIMUM 12" VERT. SEPARATION IS REQUIRED TO OTHER UTILITIES.
10. METER TO BE SET BY DEPARTMENT.
11. THE DEVELOPER/PROPERTY OWNER OR ASSIGNEE SHALL BE RESPONSIBLE FOR INSTALLATION OF SERVICES BEYOND PRESSURE TEST LIMITS AS SPECIFIED BY THE DEPARTMENT.
12. THREADED AREAS OF CORPORATION STOP AND OTHER FITTINGS SHALL BE SPIRAL WRAPPED WITH TWO (2) WRAPS OF TEFLON TAPE.

RECLAIMED WATER DUAL 5/8" X 3/4" METER SERVICE DETAIL **1R**

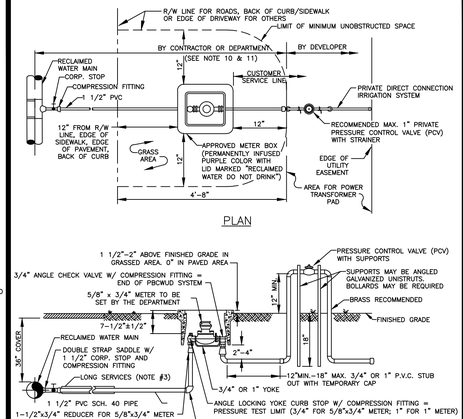

NOTES:

1. PIPING, VALVES & BOX LID TO BE PERMANENTLY IDENTIFIED AS "RECLAIMED WATER SYSTEM" COMPONENTS. PVC FITTINGS SHALL BE SCHEDULE 80.
2. 12" MINIMUM CLEARANCE TO BE MAINTAINED BETWEEN METER BOX AND ANY OBSTRUCTION.
3. FOR INSTALLATION OF SERVICES UNDER DRIVEWAYS AND ROADWAYS USE MIN. 3" DIAMETER PVC SCH 40 OR HDPE SDR 9 PURPLE CASING. CASING TO EXTEND MIN. 24" BEYOND EDGE OF PAVEMENT. END OF CASING TO BE SEALED WITH CEMENT.
4. SUCCESSIVE TAPS INTO THE WATER MAIN SHALL BE SPACED A MINIMUM OF 18" APART AND SHALL NOT BE ON A COMMON LINE PARALLEL TO THE LONGITUDINAL AXIS OF THE PIPE. TAPS ON THE SAME SIDE OF A P.V.C. PIPE SECTION SHALL BE MIN. 10' APART.
5. METER SHALL NOT BE PLACED IN SIDEWALK OR DRIVEWAY AREAS. SERVICE LINES AND TAPS SHALL NOT BE PLACED UNDER DRIVEWAYS WHENEVER POSSIBLE.
6. CHECK VALVE IS REQUIRED FOR EVERY RECLAIMED WATER SERVICE.
7. MAXIMUM SERVICE LENGTH IS 100' TO METER.
8. BEDDING (MIN. 4") AND COVER (MIN. 4") OVER SERVICE LINE OR CASING SHALL CONSIST OF FINE GRANULAR MATERIAL. UNSUITABLE IN-SITU MATERIALS SUCH AS MUCK, DEBRIS AND LARGER ROCKS SHALL BE REMOVED WITH 2" MAXIMUM SIZE.
9. METER SERVICE WILL NOT BE INSTALLED UNTIL:
   A. FORM BOARDS FOR DRIVEWAY AND/OR SIDEWALK ARE IN PLACE OR DRIVEWAY OR SIDEWALK IS IN PLACE
   B. "MINIMUM UNOBSTRUCTED SPACE" (AS SHOWN) IS PROVIDED. MINIMUM 12" VERT. SEPARATION IS REQUIRED TO OTHER UTILITIES.
10. METER TO BE SET BY DEPARTMENT.
11. THE DEVELOPER/PROPERTY OWNER OR ASSIGNEE SHALL BE RESPONSIBLE FOR INSTALLATION OF SERVICES BEYOND PRESSURE TEST LIMITS AS SPECIFIED BY THE DEPARTMENT.
12. THREADED AREAS OF CORPORATION STOP AND OTHER FITTINGS SHALL BE SPIRAL WRAPPED WITH TWO (2) WRAPS OF TEFLON TAPE.

RECLAIMED WATER SINGLE 5/8" X 3/4" OR 1" METER SERVICE DETAIL **2R**

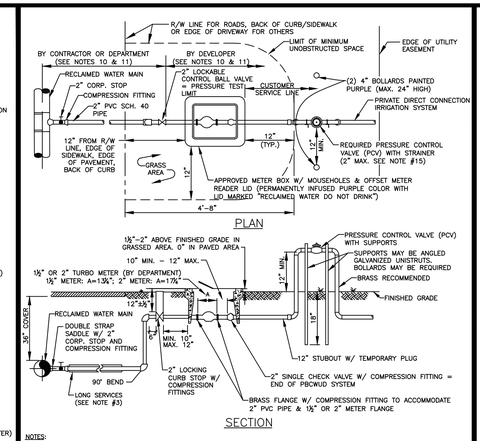

NOTES:

1. PIPING, VALVES, AND BOX LID TO BE PERMANENTLY IDENTIFIED AS "RECLAIMED WATER SYSTEM" COMPONENT. PVC FITTINGS SHALL BE SCHEDULE 80.
2. 12" MINIMUM CLEARANCE TO BE MAINTAINED BETWEEN METER BOX AND ANY OBSTRUCTION.
3. FOR INSTALLATION OF SERVICES UNDER DRIVEWAYS AND ROADWAYS, USE MINIMUM 4"ø PVC SCH. 40 OR HDPE SDR 9 PURPLE CASING. CASING TO EXTEND MINIMUM 24" BEYOND EDGE OF PAVEMENT. END OF CASING TO BE SEALED WITH CEMENT.
4. SUCCESSIVE TAPS INTO THE WATER MAIN SHALL BE SPACED A MINIMUM OF 18" APART. TAPS SPACED BETWEEN 18" AND 48" SHALL BE OFFSET TO EACH SIDE OF THE MAIN. TAPS ON THE SAME SIDE OF A PVC PIPE SECTION SHALL BE 10' APART.
5. METER SHALL NOT BE PLACED IN SIDEWALK OR DRIVEWAY AREAS. SERVICE LINES AND TAPS SHALL NOT BE PLACED UNDER DRIVEWAYS WHENEVER POSSIBLE.
6. A CHECK VALVE IS REQUIRED FOR ALL RECLAIMED WATER SERVICES.
7. THE MAXIMUM SERVICE LENGTH IS 100' TO METER.
8. BEDDING (MIN. 4") AND COVER (MIN. 4") OVER SERVICE LINE OR CASING SHALL CONSIST OF FINE GRANULAR MATERIAL. UNSUITABLE IN-SITU MATERIALS SUCH AS MUCK, DEBRIS, AND LARGER ROCKS SHALL BE REMOVED WITH 2" MAXIMUM SIZE.
9. METER SERVICE WILL NOT BE INSTALLED UNTIL:
   A. FORM BOARDS FOR DRIVEWAY AND/OR SIDEWALK ARE IN PLACE OR DRIVEWAY OR SIDEWALK IS IN PLACE.
   B. "MINIMUM UNOBSTRUCTED SPACE" (AS SHOWN) IS PROVIDED. MINIMUM 12" VERTICAL SEPARATION IS REQUIRED TO OTHER UTILITIES.
10. METER SHALL BE INSTALLED BY THE DEPARTMENT.
11. THE DEVELOPER/PROPERTY OWNER OR ASSIGNEE SHALL BE RESPONSIBLE FOR INSTALLATION OF SERVICES BEYOND PRESSURE TEST LIMITS AS SPECIFIED BY THE DEPARTMENT.
12. CONTRACTOR SHALL CONSTRUCT SERVICE COMPONENTS FOR THE METER TO BE INSTALLED "TRUE" AND "PLUMB" AND TO ALLOW METER READING THROUGH THE METER READER LID.
13. ALL HARDWARE FOR FLANGED CONNECTIONS (BOLTS, ETC.) TO BE STAINLESS STEEL.
14. THREADED AREAS OF CORPORATION STOP AND OTHER FITTINGS SHALL BE SPIRAL WRAPPED WITH TWO (2) WRAPS OF TEFLON TAPE.
15. THE PRESSURE CONTROL VALVE (PCV) SHALL BE PRIVATE FOR SERVICE WITH "DIRECT" CONNECTION TO THE IRRIGATION SYSTEM. SEE SEPARATE DETAILS FOR "LAKE DISCHARGE" CONNECTION.
16. A TIMER AND/OR REMOTE TELEMETRY UNIT MAY BE REQUIRED TO REGULATE THE AVAILABILITY OF RECLAIMED WATER FOR EACH SERVICE CONNECTION.

RECLAIMED WATER SINGLE 1 1/2" & 2" METER DETAIL (DIRECT SERVICE) **3R**

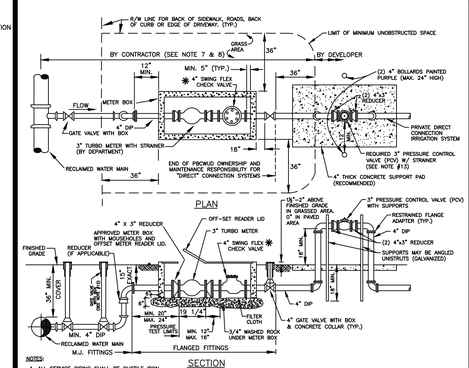

NOTES:

1. ALL SERVICE PIPING SHALL BE DUCTILE IRON.
2. APPROVED METER BOX LID TO BE PERMANENTLY INFUSED PURPLE COLOR OR PAINTED PURPLE AND MARKED "RECLAIMED WATER – DO NOT DRINK".
3. ALL FITTINGS SHALL BE MECHANICAL JOINT OR FLANGED WITH MEGALUGS OR EQUAL.
4. PIPING AND VALVES TO BE IDENTIFIED (TAGGED) AS RECLAIMED WATER SYSTEM COMPONENTS.
5. METER SHALL NOT BE PLACED IN SIDEWALK OR DRIVEWAY AREAS.
6. METER SERVICE WILL NOT BE INSTALLED UNTIL:
   A) FORM BOARDS FOR DRIVEWAY AND/OR SIDEWALK ARE IN PLACE OR DRIVEWAY OR SIDEWALK IS IN PLACE.
   B) "MINIMUM UNOBSTRUCTED SPACE" (AS SHOWN) IS PROVIDED. MINIMUM 12" VERTICAL SEPARATION IS REQUIRED TO OTHER UTILITIES.
7. METER SHALL BE INSTALLED BY THE DEPARTMENT.
8. THE DEVELOPER/PROPERTY OWNER OR ASSIGNEE SHALL BE RESPONSIBLE FOR INSTALLATION OF SERVICES BEYOND PRESSURE TEST LIMITS AS SPECIFIED BY THE DEPARTMENT.
9. CONTRACTOR SHALL CONSTRUCT SERVICE COMPONENTS FOR THE METER TO BE INSTALLED "TRUE" AND "PLUMB" AND TO ALLOW METER READING THROUGH THE METER READER LID.
10. ALL HARDWARE FOR FLANGED CONNECTIONS (BOLTS, ETC.) TO BE STAINLESS STEEL.
11. CHECK VALVE TO BE FREE OF OBSTRUCTION FOR PROPER OPERATION.
12. A GATE VALVE WITH BOX IS TO BE LOCATED WITHIN 5 FEET OF THE METER BOX.
13. THE PRESSURE CONTROL VALVE (PCV) SHALL BE PRIVATE FOR SERVICE WITH "DIRECT" CONNECTION TO THE IRRIGATION SYSTEM. SEE SEPARATE DETAILS FOR "LAKE DISCHARGE" CONNECTION.
14. A TIMER AND/OR REMOTE TELEMETRY UNIT MAY BE REQUIRED TO REGULATE THE AVAILABILITY OF RECLAIMED WATER FOR EACH SERVICE CONNECTION.

RECLAIMED WATER 3" METER SERVICE DETAIL (DIRECT SERVICE) **4R**

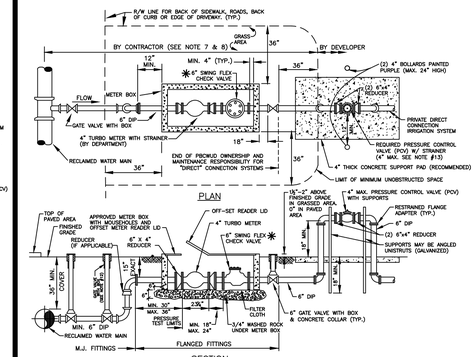

NOTES:

1. ALL SERVICE PIPING SHALL BE DUCTILE IRON.
2. APPROVED METER BOX LID TO BE PERMANENTLY INFUSED PURPLE COLOR OR PAINTED PURPLE AND MARKED "RECLAIMED WATER – DO NOT DRINK".
3. ALL FITTINGS SHALL BE MECHANICAL JOINT OR FLANGED WITH MEGALUGS OR EQUAL.
4. PIPING AND VALVES TO BE IDENTIFIED (TAGGED) AS RECLAIMED WATER SYSTEM COMPONENTS.
5. METER SHALL NOT BE PLACED IN SIDEWALK OR DRIVEWAY AREAS.
6. METER SERVICE WILL NOT BE INSTALLED UNTIL:
   A) FORM BOARDS FOR DRIVEWAY AND/OR SIDEWALK ARE IN PLACE OR DRIVEWAY OR SIDEWALK IS IN PLACE.
   B) "MINIMUM UNOBSTRUCTED SPACE" (AS SHOWN) IS PROVIDED. MINIMUM 12" VERTICAL SEPARATION IS REQUIRED TO OTHER UTILITIES.
7. METER SHALL BE INSTALLED BY THE DEPARTMENT.
8. THE DEVELOPER/PROPERTY OWNER OR ASSIGNEE SHALL BE RESPONSIBLE FOR INSTALLATION OF SERVICES BEYOND PRESSURE TEST LIMITS AS SPECIFIED BY THE DEPARTMENT.
9. CONTRACTOR SHALL CONSTRUCT SERVICE COMPONENTS FOR THE METER TO BE INSTALLED "TRUE" AND "PLUMB" AND TO ALLOW METER READING THROUGH THE METER READER LID.
10. ALL HARDWARE FOR FLANGED CONNECTIONS (BOLTS, ETC.) TO BE STAINLESS STEEL.
11. CHECK VALVE TO BE FREE OF OBSTRUCTION FOR PROPER OPERATION.
12. A GATE VALVE WITH BOX IS TO BE LOCATED WITHIN 5 FEET OF THE METER BOX.
13. THE PRESSURE CONTROL VALVE (PCV) SHALL BE PRIVATE FOR SERVICE WITH "DIRECT" CONNECTION TO THE IRRIGATION SYSTEM. SEE SEPARATE DETAILS FOR "LAKE DISCHARGE" CONNECTION.
14. A TIMER AND/OR REMOTE TELEMETRY UNIT MAY BE REQUIRED TO REGULATE THE AVAILABILITY OF RECLAIMED WATER FOR EACH SERVICE CONNECTION.

RECLAIMED WATER 4" METER SERVICE DETAIL (DIRECT SERVICE) **5R**

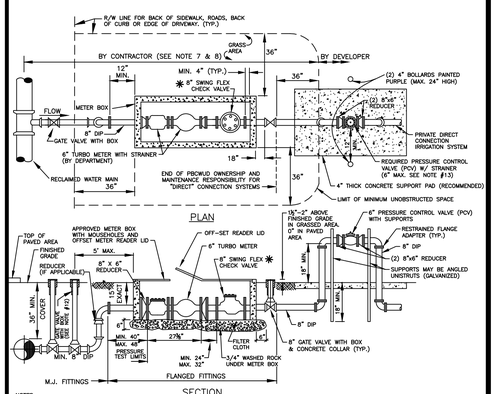

NOTES:

1. ALL SERVICE PIPING SHALL BE DUCTILE IRON.
2. APPROVED METER BOX LID TO BE PERMANENTLY INFUSED PURPLE COLOR OR PAINTED PURPLE AND MARKED "RECLAIMED WATER – DO NOT DRINK".
3. ALL FITTINGS SHALL BE MECHANICAL JOINT OR FLANGED WITH MEGALUGS OR EQUAL.
4. PIPING AND VALVES TO BE IDENTIFIED (TAGGED) AS RECLAIMED WATER SYSTEM COMPONENTS.
5. METER SHALL NOT BE PLACED IN SIDEWALK OR DRIVEWAY AREAS.
6. METER SERVICE WILL NOT BE INSTALLED UNTIL:
   A) FORM BOARDS FOR DRIVEWAY AND/OR SIDEWALK ARE IN PLACE OR DRIVEWAY OR SIDEWALK IS IN PLACE.
   B) "MINIMUM UNOBSTRUCTED SPACE" (AS SHOWN) IS PROVIDED. MINIMUM 12" VERTICAL SEPARATION IS REQUIRED TO OTHER UTILITIES.
7. METER SHALL BE INSTALLED BY THE DEPARTMENT.
8. THE DEVELOPER/PROPERTY OWNER OR ASSIGNEE SHALL BE RESPONSIBLE FOR INSTALLATION OF SERVICES BEYOND PRESSURE TEST LIMITS AS SPECIFIED BY THE DEPARTMENT.
9. CONTRACTOR SHALL CONSTRUCT SERVICE COMPONENTS FOR THE METER TO BE INSTALLED "TRUE" AND "PLUMB" AND TO ALLOW METER READING THROUGH THE METER READER LID.
10. ALL HARDWARE FOR FLANGED CONNECTIONS (BOLTS, ETC.) TO BE STAINLESS STEEL.
11. CHECK VALVE TO BE FREE OF OBSTRUCTION FOR PROPER OPERATION.
12. A GATE VALVE WITH BOX IS TO BE LOCATED WITHIN 5 FEET OF THE METER BOX.
13. THE PRESSURE CONTROL VALVE (PCV) SHALL BE PRIVATE FOR SERVICE WITH "DIRECT" CONNECTION TO THE IRRIGATION SYSTEM. SEE SEPARATE DETAILS FOR "LAKE DISCHARGE" CONNECTION.
14. A TIMER AND/OR REMOTE TELEMETRY UNIT MAY BE REQUIRED TO REGULATE THE AVAILABILITY OF RECLAIMED WATER FOR EACH SERVICE CONNECTION.

RECLAIMED WATER 6" METER SERVICE DETAIL (DIRECT SERVICE) **6R**

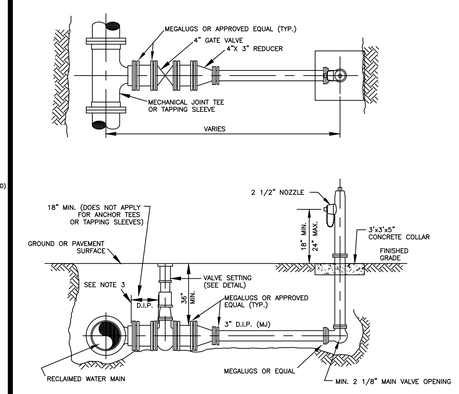

NOTES:

1. HYDRANT SHALL BE INSTALLED PLUMB AND TRUE IN UNOBSTRUCTED LOCATION (5 FEET CLEARANCE ON ALL SIDES).
2. THE SAME MODEL HYDRANT SHALL BE USED THROUGHOUT CURRENT CONTRACT PHASE. COLOR SHALL BE PURPLE, PANTONE 522C, OR APPROVED EQUAL.
3. VALVE SHALL BE PLACED ADJACENT TO MAIN AND RESTRAINED WITH MEGALUGS OR EQUAL.
4. ALL HYDRANTS SHALL BE TEED OFF OF MAINS.
5. HYDRANTS SHALL NOT BE PLACED IN SIDEWALKS, ROADWAYS, OR BIKE PATHS.
6. NOZZLE TO FACE ROADWAY.
7. PIPING, VALVES, AND HYDRANTS TO BE IDENTIFIED (TAGGED) AS RECLAIMED WATER SYSTEM COMPONENTS.
8. ALL BURIED HYDRANT HARDWARE SHALL BE STAINLESS STEEL (304 S.S. NUTS, 316 S.S. BOLTS AND WASHERS).

RECLAIMED WATER MAIN TYPICAL FLUSHING HYDRANT INSTALLATION **7R**

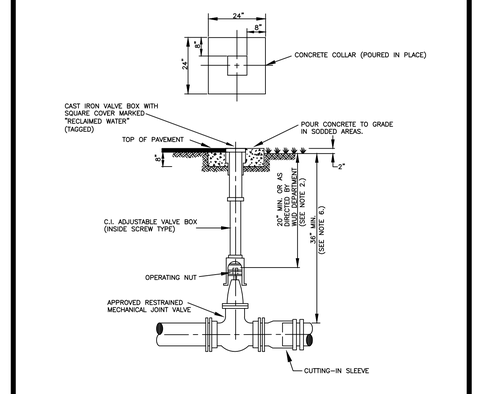

NOTES:

1. CONCRETE COLLAR IS NOT REQUIRED IN PAVED AREAS IF PAVEMENT SURFACE IS FINISHED PRIOR TO CONDITIONAL FINAL INSPECTION.
2. WHEN OPERATING NUT IS DEEPER THAN 36" A ONE PIECE EXTENSION WILL BE REQUIRED TO BRING OPERATING NUT 20"–30" BELOW FINISHED GRADE. EXTENSION BOLTS & NUTS ARE TO BE STAINLESS STEEL. A HIGH STRENGTH STEEL CENTERING PLATE, WELDED TO THE EXTENSION, IS ALSO REQUIRED.
3. VALVE BOXES SHALL HAVE SQUARE COVERS MARKED "RECLAIMED WATER".
4. EXTENSION VALVE BOX TO BE D.I.P. OR C–900 PVC DR 18 (COLOR: PURPLE).
5. A CUT–IN INSTALLATION SHALL REQUIRE MEGALUGS OR EQUAL THROUGHOUT ASSEMBLY.
6. IN ORDER TO MAINTAIN ADEQUATE COVER OVER VALVE NUT, THE FOLLOWING MINIMUM COVERS OVER PIPE ARE REQUIRED:

GATE VALVE SIZE	MIN. COVER OVER PIPE
16"	48"
20"	54"
24"	60"
30"	72"

7. PIPE SHALL BE RESTRAINED ON BOTH SIDES OF THE VALVE AS REQUIRED.
8. VALVES IN ROADWAYS SHALL BE LOCATED OUTSIDE OF WHEEL PATHS.

RECLAIMED WATER MAIN TYPICAL GATE VALVE SETTING AND MAIN CUT–IN DETAIL **8R**

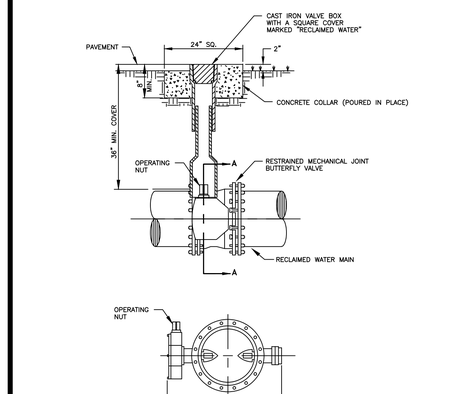

NOTES:

1. CONCRETE COLLAR IS NOT REQUIRED IN PAVED AREAS IF PAVEMENT SURFACE IS FINISHED PRIOR TO CONDITIONAL FINAL INSPECTION.
2. WHEN TOP OF OPERATING NUT IS DEEPER THAN 36" AN EXTENSION WILL BE REQUIRED TO BRING OPERATING NUT 24"–30" BELOW FINISHED GRADE. EXTENSION BOLTS & NUTS ARE TO BE STAINLESS STEEL. A HIGH STRENGTH STEEL CENTERING PLATE, WELDED TO THE EXTENSION, IS ALSO REQUIRED.
3. VALVE BOXES SHALL HAVE SQUARE COVER MARKED "RECLAIMED WATER".
4. A CUT–IN INSTALLATION SHALL REQUIRE MEGALUGS OR EQUAL THROUGHOUT ASSEMBLY.
5. EXTENSION VALVE BOX TO BE D.I.P. OR C–900 PVC DR 18 (COLOR: PURPLE).
6. PIPE SHALL BE RESTRAINED ON BOTH SIDES OF THE VALVE AS REQUIRED.
7. VALVES IN ROADWAYS SHALL BE LOCATED OUTSIDE OF WHEEL PATHS.

RECLAIMED WATER MAIN TYPICAL BUTTERFLY VALVE SETTING **9R**

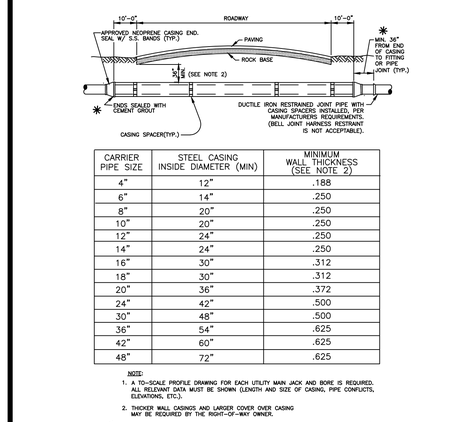
10'-0"
ROADWAY
10'-0"
APPROVED NEOPRENE CASING END. SEAL W/ S.S. BANDS (TYP.)
PAVING
ROCK BASE
MIN. 36" COVER OVER TOP OF CASING TO FITTING OR PIPE JOINT (TYP.)
36" (SEE NOTE 2)
ENDS SEALED WITH CEMENT GROUT
DUCTILE IRON RESTRAINED JOINT PIPE WITH CASING SPACER